Synthex MIDI KIT

Midi kit for Elka Synthex

MuStudio

Translated from french version by Myriam Emond

version 1.0

February 10, 2012

About MIDI KIT

The MIDI KIT is composed of many pieces. It offers to a Synthex synthesizer the possibility to have a MIDI communication.

The Synthex has been produced at 1850 units between 1981 and 1984 :

- Production I : 50 units (no MIDI)
- Production II : 800 units (optional MIDI)
- Production III : 1000 units (native MIDI)

Concerning the MIDI Kit, only the two first series of synthesizers can ben equiped with it. The last serie (production III) is already equiped with MIDI interface, and the three DIN-5 plugs are present on the rear panel.

The three possible configurations of Synthex are presented on Figures 2, 3 and 4.

Figure 1: Elka Synthex

Figure 2: Without MIDI

Figure 3: Optional MIDI

Figure 4: Full MIDI

Figure 5: The three configurations of the MIDI location

What is the MIDI capacity ?

Using this kit, the Synthex can receive and transmit MIDI events.

The MIDI-KIT is fully compatible with the original kit that was initially proposed as an option by Elka in the 1980s, but that is not found today. At that time (early 80's) the MIDI standard was in its infancy, and each manufacturer had their own implementation that was not rigorous and compatible with the other one, or even limited as the Synthex. The Synthex doesn't filter the MIDI stream. It only accepts messages : note-on and note-off. That means that it can receive and emit on all channels [0-15], the key [0-127] and the velocity [0-127] respecting the limits of the 8 simultaneous notes polyphony. If it receives more data, it goes into error !

To solve this known problem of saturation of the buffer MIDI Synthex, we decided to produce in the near future a small map to filter messages (other than note-on note-off on a channel) and also to select a reception channel and a channel for transmission. This card would be inserted between the CPU and the Synthex MIDI card.

The MIDI KIT

This document will help you in order to install the kit. It is very important to respect the chonogical order of the procedure and to refer to the pictures as often as possible.

Each element is codified by a letter and a number . For exemple : E1 for EPROM 1, C1 for Component 1, V1 for Screw 1, etc ...

You can locate easily an element on the overall Figures 6 and 7.

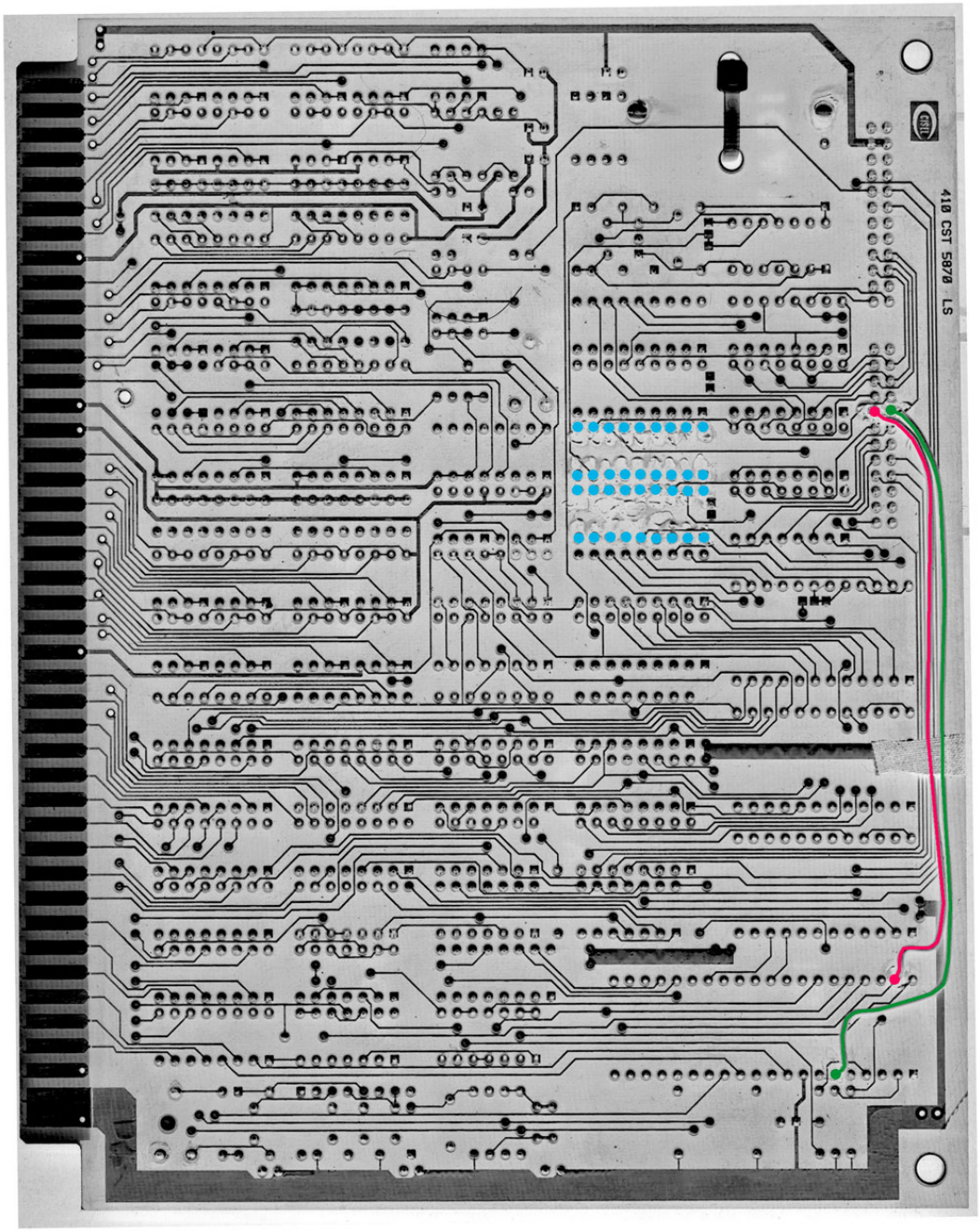

Figure 6: CPU board without MIDI, tracks side (F1 in green, F2 in red, holes L1 and L2 in blue)

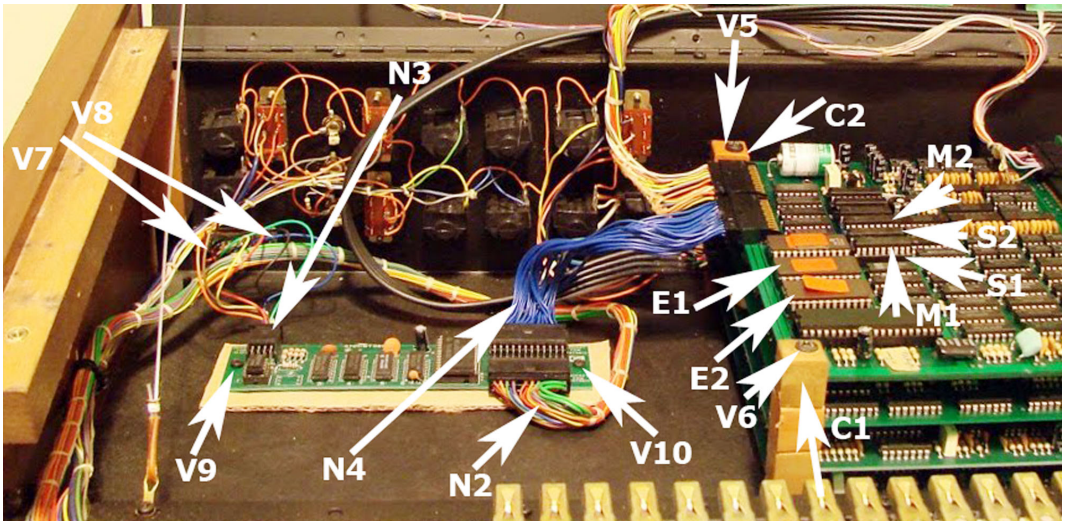

Figure 7: Inside the synthesizer after MIDI kit's installation

Safety and installation instructions

WARNING

When using electronic products, basic precautions should always be followed, including the following :
- unplug the power supply cord from the outlet.
- unplug the audio connectors.

The device should be turned "OFF" in order to make the complete installation. The presence of power can create the possibility of damage to property and / or personal injury !

To install the kit, the following tools are required :

1. Soldering iron or soldering station
2. Solder
3. Desoldering pump
4. Cross screwdriver

Before starting the installation, make sure that you have the last version of this document. The last version is available on **mustudio.fr**

If you have any doubt, contact us at **contact@mustudio.fr**, we will help you and try to find a solution.

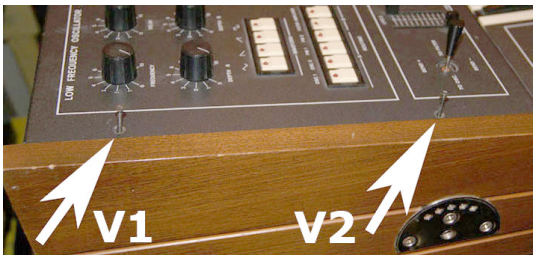

Figure 8: Left side screws

Figure 9: Right side screws

Inventory of the MIDI KIT

MIDI KIT consists of the following elements :

1. This documentation is absolutely necessary to install the MIDI KIT (DOC)
2. One MIDI BOARD (MIDI Board)
3. One wire to connect the MIDI interface with the Synthex CPU Board (N3)
4. One wire to connect the MIDI interface with the outside of the Synthex (N4)
5. One wire to connect the ouside of the Synthex to three female MIDI connectors (Octopus MIDI cable)
6. Two EPROM (E1 and E2)
7. Two DIP sockets for RAM chips (S1 and S2)
8. Two RAM chips (M1 and M2)
9. Two straps wires (F1 and F2)
10. Screws to fixe the MIDI board and the Octopus MIDI cable (Screws : V7, V8, V9 and V10; Spacers : Et1 and Et2; Rings : R1 and R2)

How to open the Synthex

To install the MIDI kit and modify the CPU board, the Synthex have to be opened using the Figures 8 and 9 :

1. Unscrew the screws V1, V2, V3 and V4
2. Open the front panel and push it forwards, by taking it near the keyboard. The front panel and the subframe are usually linked by nylon cables that are disposed on each side, to prevent any fall forwards.

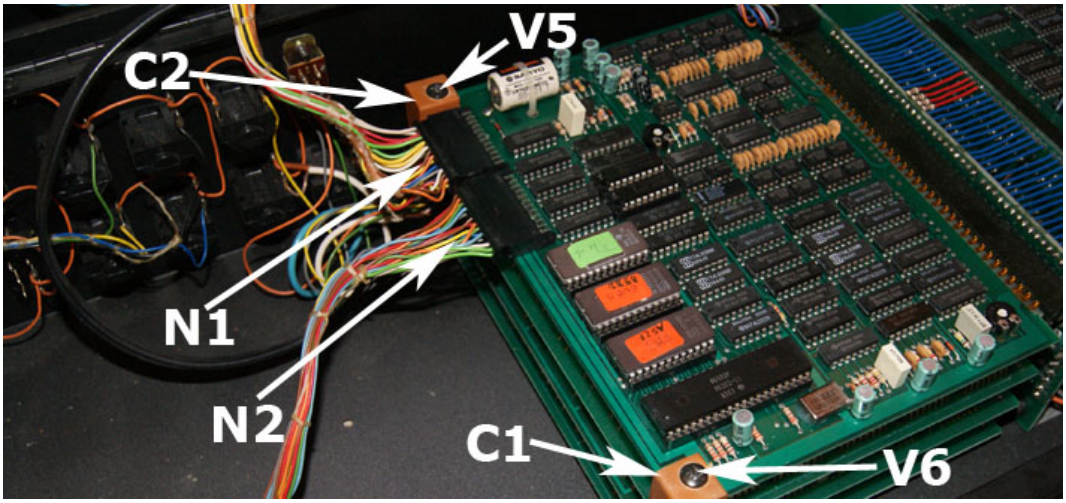

Figure 10: The Synthex CPU board

Retrofit the Synthex CPU board

Remove the CPU board

Using the Figure 10, do the following :

1. Unplug the two wires N1 and N2
2. Unscrew the two screws V5 and V6
3. Remove the two spacers C1 and C2
4. Remove gently the CPU board

Change the EPROM

Remove the two EPROM E1 and E2. Using a sharp knife or a thin screwdriver between the EPROM and the socket, tilt up and down in order to remove gently the two components from the sockets. The Figures 11 and 12 should help you.

Put up the new EPROM E3 and E4 aligning each pin of the component with the socket's holes.

Be careful ! You must respect the direction of the EPROM as shown in Figure 13 !

The final configuration is :

- EPROM T41 or other if not removed,
- EPROM EU85 (E3) to replace EPROM E7 (E1) or other,
- EPROM FM3 (E4) to replace EPROM F7 (E2) or other.

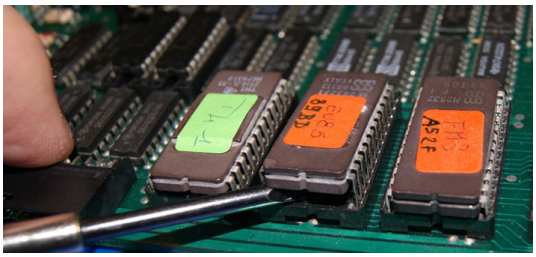

Figure 11

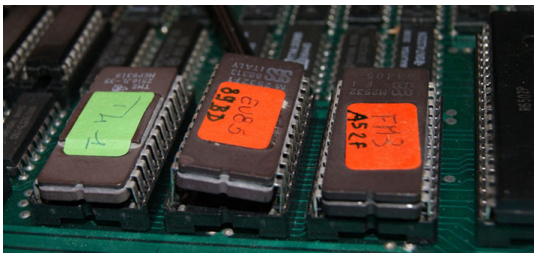

Figure 12

Extraction of EPROM

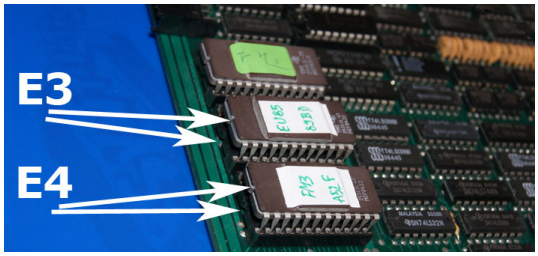

Figure 13: New EPROM

When the components are positioned correctly, press firmly ! The EPROM should not move into the socket.

Solder the wires

So that the CPU board receive the data from the new MIDI board, two wires should be soldered between the connector and the Synthex 6502 processor chip on the tracks side of the board.

As indicated on Figure 6 and zooms Figure 14 and 15, the positions of wires are :

- Green wire (F1) between CPU pin 6 and contact 9 of MIDI / Keyboard connector
- Red wire (F2) between CPU pin 39 and contact 10 of MIDI / Keyboard connector

Solder the DIP sockets

For this step, there are two possibilities:

- The hole locations are empty : Put on the two sockets (DIP 18) in the hole locations L1 and L2 as shown on Figures 16 and 6. Be careful : the components must be on the right side of the board and the keyed must be well positioned as indicated by the arrows L1 and L2 ! Solder the sockets.
- The hole locations are full with soldering flux. Using the desoldering pump remove all the soldering flux of each hole locations. Then put on the sockets as described previously (the hole locations are empty).

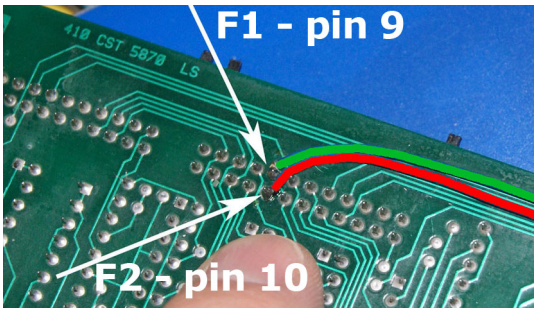

Figure 14: View of the connector

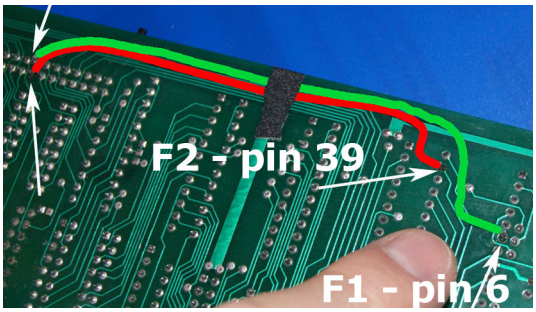

Figure 15: Red and green straps

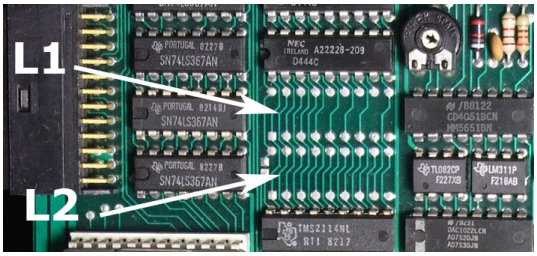

Figure 16: location of L1 and L2

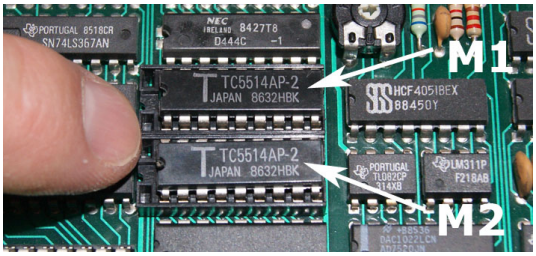

Figure 17: News memories

Install the memories

Slot the memories M1 and M2 on the sockets. Respecting the keyed's direction as shown on Figure 17. The RAM memory delivred in the MIDI kit can be of a different brand and reference (HM6514, TC5514, D444C, etc. . .) depending on my supplies. The Figure 17 show the position of the keyed not the reference of memories !

Put back the CPU board

To replace the Synthex CPU board must be done in order :

1. Slot the CPU board in the BUS connector. The components of the board should be up
2. Put back the two spacers C1 and C2
3. Screw the two screws V5 and V6
4. Plug the wire N1 (that goes to the front panel)

Set up the MIDI board

Set up the inner MIDI cable

1. Unscrew and remove the cover on the Synthex rear panel in the down left «COMPUTER INTERFACE» section.

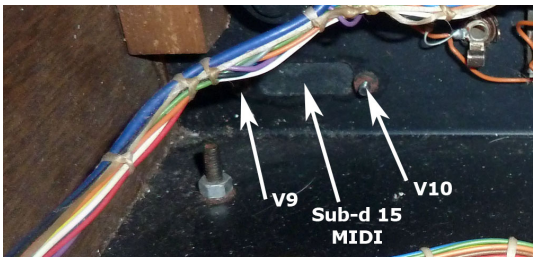

Figure 18: Location from the inside

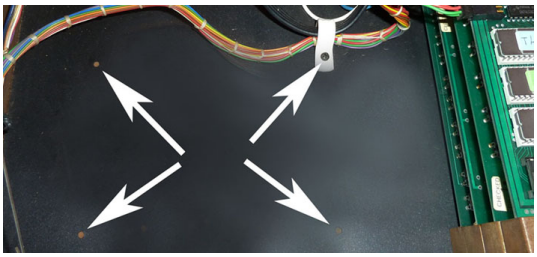

Figure 19: Holes in the bottom of Synthex

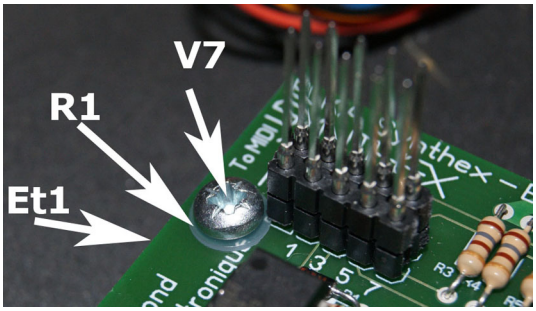

Figure 20: PCB Support on the left

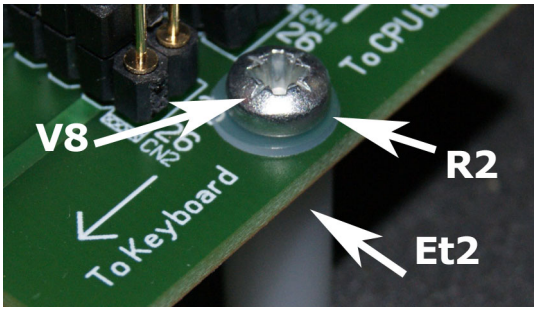

Figure 21: PCB Support on the right

2. You can see a hole for a SUB-D15 plugging and two holes for screws, as shown in Figures 2, 18 and possibly 3. May be there are three screws holes, if a SUB-D 15 connector is installed without MIDI board in the Synthex.

3. Insert the MIDI cable in the main hole, the largest wide of the connector turned up. The connector is inserted from the inside and fixed by two screws V9 and V10 as shown in Figure 3

How to set up the MIDI board

On the bottom inside of Synthex, there is normally two holes placed 14 cm from each other. The MIDI board can be screwed on these holes (see Figure 19).

Unplug the wire N2 (if been plugged again), that connects keyboard and CPU board (it's the lowest connector on the PCB)

Set up the MIDI board by inserting in the order from the bottom : two plastic spacers, the MIDI PCB board, two plastic rings, two wood screews, as shown on Figures 20 and 21.

Screw firmly the screws V7 and V8 in order the MIDI board doesn't move.

Set up the wires N1, N2, N3 and N4. Attention to the direction of the wires and the keyed on the connectors HE-10, and do not bend the connectors that are fragile ! See the Figure 22.

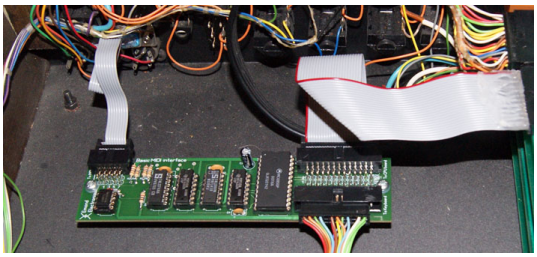

Figure 22: All connectors in place

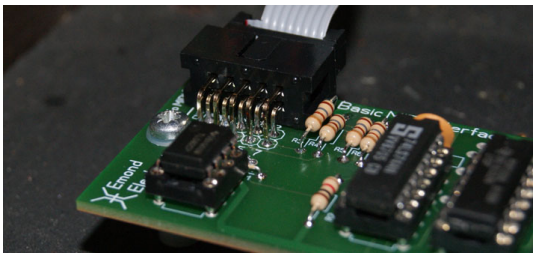

Figure 23: The MIDI connector

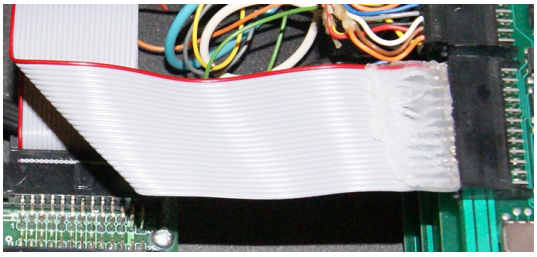

Figure 24: The CPU connector

Figure 25: The octopus MIDI cable

Plug the femal end of the MIDI cable (HE-10) in the MIDI connector (male HE-10) of the MIDI board.

Attention to respect the direction of the connector : the pin 1 is in the lower left on the PCB. Number 1 is the red wire, there is a small triangle on the connector (lower left). See Figures 23 and 24 to check the assembly !

Set up the outside MIDI cable

The octopus MIDI cable is made up of three DIN-5 connectors (In, Out, Thru) on one end, and a SUB-D 15 connector on the other end as shown in Figure 25. The SUB-D 15 connector is fixed by two screws on the femal connector on the Synthex rear panel.

Close the Synthex

Put away all the tools and other objects that you would have forgotten inside the Synthex.

Shut up the front panel. Screw the screws V1, V2, V3 et V4 !

Congratulation ! Your MIDI kit is now installed !